BEARING DIMENSIONS (ISO 11687-2), (The old version_DIN 31693)

HF TYPE

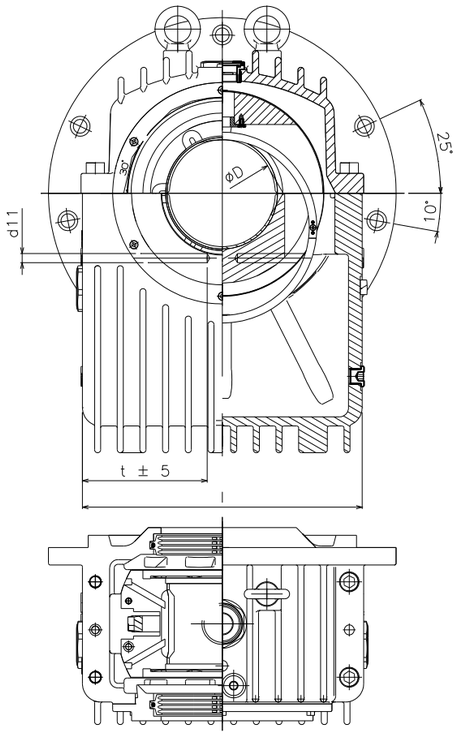

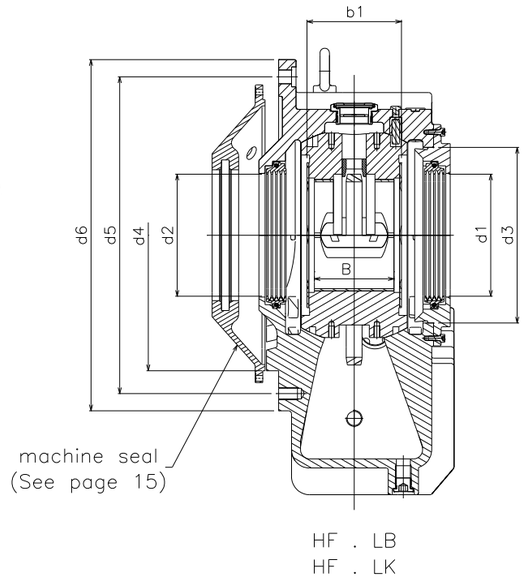

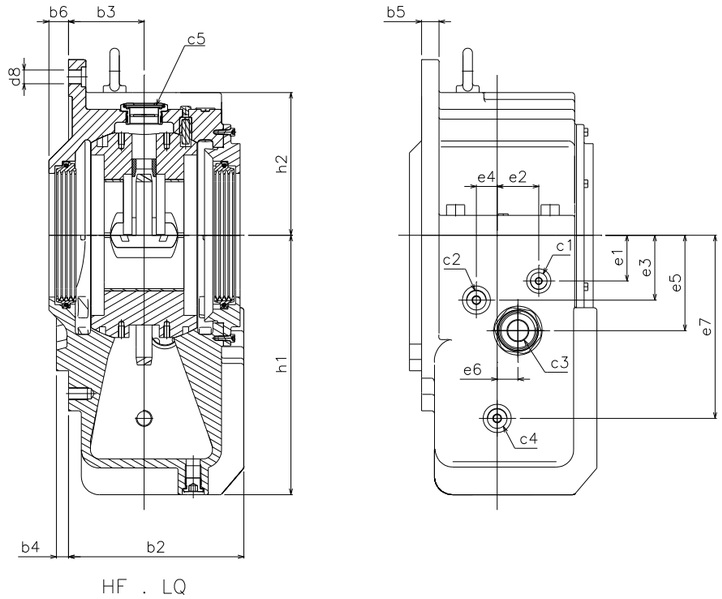

As for bearing types F.ZL.,
the oil outlet with weir is to be mounted
horizontally at the bottom.
The mark at the flange will then be visible
centrally at the top.

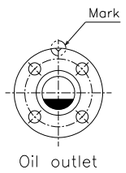

c1 = Oil inlet if connected the oil circulating system or circulating pump
c2 = Thermometer connection
c3 = Oil level or oil outlet if connected to oil circulating system
c4 = Screw plug for oil sump thermometer,
suction line of circulating pump,
connection of heater
(or modified for finned tube oil cooler optionally)
c5 = Sight glass

DESIGN OF BEARING

H F N L B 11 - 140
1 2 3 4 5 6 7

1: Type

2: Type of housing
F: side flange bearing with cooling fins
M: centrally flange with cooling fins
G: plummer block without cooling fins
R: plummer block with cooling fins

3: Heat dissipation
N: normal cooling
W: water cooling in oil sump
U: circulating pump and natural cooling
Z: lubrication by oil circulation with external oil cooling

4: Bore type and Lubrication type
C: cylindrical bore without lubrication ring
L: cylindrical bore with lubricating ring
Y: lemon shape bearing without lubricating ring
V: four lobe bearing without lubricating ring

5: Axial bearing (Thrust bearing)
Q: without sliding surfaces
B: with plain sliding surfaces and lubrication grooves
K: with thrust pads (taper land)
A: with tiling pads

6: Bore size

7: Shaft size

Dimensions in mm

Size	From bearing size 14 larger bore diameters are possible(Information upon request)																																	Weight	Oil-capacity
	D	B	b_1	b_2	b_3	b_4	b_5	b_6	d_1	d_2	d_3	d_4	d_5	d_6	d_8	d_{11}	c_1	c_2	c_3	c_4	c_5	e1	e2	e3	e4	e5	e6	e7	h_1	h_2	l	t	[kg]	[liters]
9	80 90 100	61.4 61.4 65	80 -0.22	162	70	14	12	23	80/90/100/110	100	150	280	310	340	14	11	PF 3/8	PF 1/2	PF 1 1/4	PF 1/2	PF 1	35	35.5	60	20	85	22.5	175	250	130	270	115 115 115	46	2.9
11	100 110 125	81.4 81.4 85	100 -0.22	192	80	15	17	29	100/110/125/140	125	180	315	350	380	14	11	PF 3/8	PF 1/2	PF 1 1/4	PF 1/2	PF 1	40	42	70	22.5	100	22.5	195	280	144	310	135 135 127	74	4.1
14	125 140 160 180	105.4 105.4 106.4 106.4	125 -0.22	232	100	16	23	26	125/140/160/180	160 160 160 180	230	355	415	460	18	12	PF 3/8	PF 1/2	PF 1 1/2	PF 1/2	PF 1 1/2	60	55	85	27.5	125	27.5	240	340	187	370	165 165 143 133	125	8.4
18	160 180 200 225	135.7 135.7 140.4 140.4	160 -0.22	274	116	18	25	31	160/180/200/225	200 200 200 225	275	400	490	540	22	13	PF 1/2	PF 1/2	PF 1 1/2	PF 1/2	PF 2	70	68	105	30	155	30	270	400	222	440	197 197 179 150	200	13.4
22	200 225 250 280 300	168.5 168.5 175.7 175.7 175.7	200 -0.22	360	150	20	37	32	200/225/250/280/300	250 250 250 280 300	340	500	620	680	26	13	PF 3/4	PF 1/2	PF 2	PF 1/2	PF 1 1/2	80	83	135	40	175	40	350	425	294	550	252 252 242 196 181	430	21.1
28	250 280 300 315 335 355	213.2 213.2 218.5 218.5 218.5 218.5	250 -0.24	415	170	24	42	43	250/280/300/315 /335/355	315 315 315 315 355 355	440	600	770	850	33	13	PF 3/4	PF 1/2	PF 2 1/2	PF 1/2	PF 2 1/2	95	106	155	50	220	50	400	500	342	690	325 325 285 267 242 230	770	32.4