BEARING DIMENSIONS (ISO 11687-3), (The old version_DIN 31694)

HM TYPE

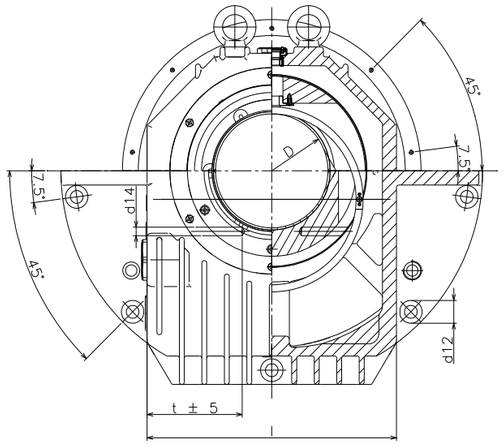

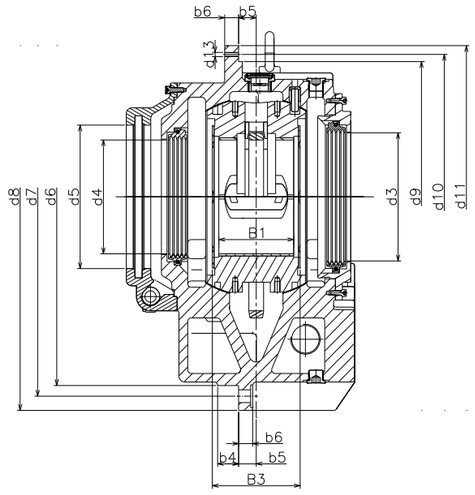

HM. LB
HM. LK

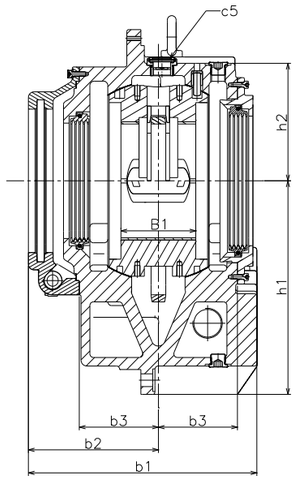

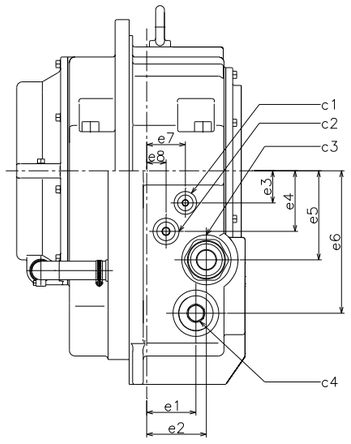

HM. LQ

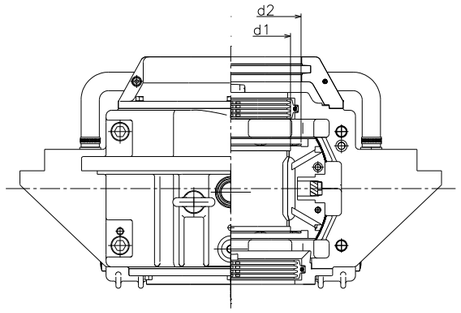

As for bearing types F.ZL.,
the oil outlet with weir is to be mounted
horizontally at the bottom.
The mark at the flange will then be visible
centrally at the top.

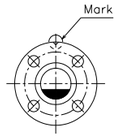

Oil outlet

c1 = oil inlet if connected to oil circulating system or circulating pump
c2 = thermometer connection on both sides PF 1/2"
c3 = oil level or oil outlet if connected to oil circulating system
oil level with self-contained lubrication middle of sight glass
oil level for circulating oil approx. 6 mm above lower edge of sight glass
c4 = screw plug
(connection for heater, oil pump thermometer, suction pipe of
circulating pump, finned tube oil cooler)
on both side PF1 1/4"
c5 = Sight glass

DESIGN OF BEARING

H F N L B 11 - 140
1 2 3 4 5 6 7

1: Type

2: Type of housing
F: side flange bearing with cooling fins
M: centrally flange with cooling fins
G: plummer block without cooling fins
R: plummer block with cooling fins

3: Heat dissipation
N: normal cooling
W: water cooling in oil sump
U: circulating pump and natural cooling
Z: lubrication by oil circulation with external oil cooling

4: Bore type and Lubrication type
C: cylindrical bore without lubrication ring
L: cylindrical bore with lubricating ring
Y: lemon shape bearing without lubricating ring
V: four lobe bearing without lubricating ring

5: Axial bearing (Thrust bearing)
Q: without sliding surfaces
B: with plain sliding surfaces and lubrication grooves
K: with thrust pads (taper land)
A: with tiling pads

6: Bore size

7: Shaft size

Dimensions in mm

Size	D	B1	B3	b1	b2	b3	b4	b5	b6	b19	d1	d2	d3	d4	d5	d6	d7	d8	d9	d10	d11	d12	d13	d14	c1	c3	c5	h1	h2	e1	e2	e3	e4	e5	e6	e7	e8	l	t	Weight [kg]	Oil-capacity [liters]
9	80 90 100	61.4 61.4 65	80 -0.22	250	145	80	30	20	16	205	86 96 106	110 120 130	80/90/100/110	100	111.5 121.5 131.5	375	400	425	270	285	300	11	M6	11	PF 3/8	PF 1 1/4	PF 1	213	115	45	67.5	27.5	60	85	142	35.5	20	250	105 105 105	55	2.2
11	100 110 125	81.4 81.4 85	100	280	160	95	30	20	18	230	108 118 133	135 150 160	100/110/125/140	125	136.5 151.5 161.5	450	475	500	320	340	355	14	M6	11	PF 3/8	PF 1 1/4	PF 1	250	135	55	70	35	70	100	167	42	22.5	300	130 130 122	85	3.9
14	125 140 160 180	105.4 105.4 106.4 106.4	125 -0.22	325	185	112.5	30	25	20	280	135 150 170 190	170 190 200 220	125/140/160/180	160 160 160 180	171.5 191.5 201.5 221.5	530	560	600	380	400	425	18	M6	11	PF 3/8	PF 1 1/2	PF 1	300	165	70	85	45	85	125	200	55	27.5	355	158 158 137 117	140	6.4
18	160 180 200 225	135.7 135.7 140.4 140.4	160 -0.22	375	210	132.5	30	25	25	310	172 192 212 237	215 240 250 275	160/180/200/225	200 200 200 225	216.5 241.5 251.5 276.5	630	670	710	450	475	500	22	M8	13	PF 1/2	PF 1 1/2	PF 1	355	195	80	80	60	105	155	240	68	30	425	190 190 170 145	230	9.8
22	200 225 250 280 300	168.5 168.5 175.7 175.7 175.7	200 -0.22	445	245	167.5	30	30	30	385	214 239 264 294 310	265 290 315 345 345	200/225/250/280/300	250 250 250 280 300	266.5 291.5 316.5 346.5 346.5	800	850	900	570	600	630	26	M10	13	PF 3/4	PF 2	PF 1 1/4	450	250	100	100	70	135	175	310	83	40	530	242 242 228 182 166	425	23.3
28	250 280 300 315 335 355	213.2 213.2 218.5 218.5 218.5 218.5	250 -0.24	550	300	212.5	35	30	35	465	266 296 316 331 351 371	325 355 375 390 410 430	250/280/300/315/335/355	315 315 315 315 355 355	326.5 356.5 376.5 391.5 431.5 431.5	1000	1060	1120	730	765	800	33	M12	13	PF 3/4	PF 2 1/2	PF 1 1/4	560	300	130	130	95	155	220	385	106	50	670	312 312 262 257 232 219	860	48.6