BEARING DIMENSIONS (ISO 11687-1), (The old version_DIN 31690)

HR TYPE

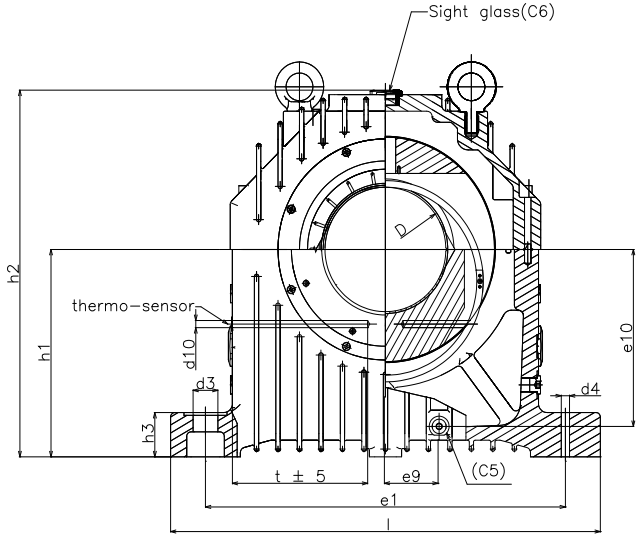

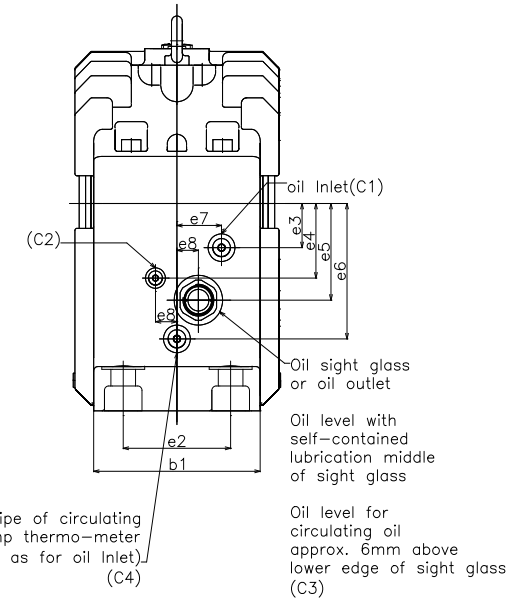

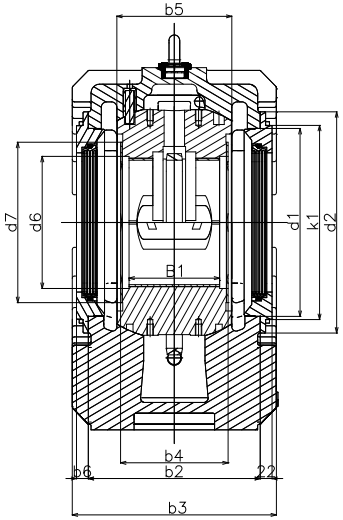

HR. LB
HR. LK

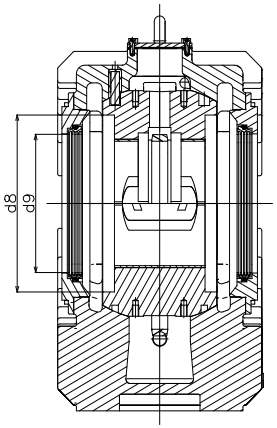

HR. LQ

As for bearing types F.ZL.,
the oil outlet with weir is to be mounted
horizontally at the bottom.
The mark at the flange will then be visible
centrally at the top.

Dimensions in mm

SIZE	D	B1	b1	b2	b3	b4	b5	b6	d1	d2	d3	d4	d6	d7	d8	d9	d10	C1	C2	C3	C4	C5	C6	e1	e2	e3	e4	e5	e6	e7	e8	e9	e10	h1	h2	h3	K1 Thread	l	t	inlet	outlet	Weight [Kg] approx.	Oil-capacity [Liters]
9	80 90 100	61.4 61.4 65	145	150	190	80 -0.22	95	22	150	190	22 For M16	10.4	86 96 106	110 120 130	135 145 152	80 90 100	11	PF 3/8	PF 1/2	PF 1 1/4	PF 3/8	PF 3/8	PF 1	300	90	30	60	85	135	35.5	20	57.5	165	190	324	35	P.C.D 170 6xM6	355	105 105 105	PF 3/8	PF 1 1/4	45	2
11	80 90 100 110 125	81.4 81.4 81.4 81.4 85	165	170	205	100 -0.22	110	22	180	215	26 for M20	10.4	86 98 108 118 133	110 125 135 150 160	135 145 155 170 175	80 90 100 110 125	11	PF 3/8	PF 1/2	PF 1 1/4	PF 1/2	PF 1/2	PF 1	375	100	40	60 70 70 70 70	100	150	42	22.5	57.5	193	225	378	50	P.C.D 202 6xM6	450	138 138 138 138 130	PF 3/8	PF 1 1/4	70	3.3
14	125 140 160 180	105 105 106 106	205	215	255	125 -0.22	140	22	230	290	30 For M24	10.4	135 150 170 190	170 190 200 220	195 210 220 228	125 140 160 180	12	PF 1/2	PF 1/2	PF 1 1/2	PF 1/2	PF 1/2	PF 1 1/2	450	125	60	85	125	180	55	27.5	70.5	225	265	453	60	P.C.D 270 6xM6	540	174 170 148 138	PF 1/2	PF 1 1/2	135	5.5
18	160 180 200 225	136 136 140 140	245	255	300	160 -0.22	170	22	275	340	40 For M30	15.5	172 192 212 237	215 240 250 275	245 270 275 284	160 180 200 225	13	PF 1/2	PF 1/2	PF 1 1/2	PF 1/2	PF 1/2	PF 2	560	150	70	105	155	215	68	30	82.5	269	315	554	70	P.C.D 320 8xM8	660	212 212 194 165	PF 1/2	PF 1 1/2	240	9.1
22	200 225 250 280 300	169 169 176 176 176	310	320	380	200 -0.22	212	22	340	400	46 For M36	15.5	214 239 264 294 310	265 290 315 345 345	310 320 345 351 351	200 225 250 280 300	13	PF 3/4	PF 1/2	PF 2	PF 3/4	PF 1/2	PF 2	670	200	80	135	175	245	83	40	100	320	375	663	80	P.C.D 380 8xM8	800	262 262 252 206 191	PF 3/4	PF 2	430	16
28	250 280 300 315 355	213 213 219 219 219	370	380	450	250 -0.24	262	22	440	525	55 For M42	20.6	266 296 316 331 371	325 355 375 390 430	385 415 415 430 440	250 280 300 315 355	13	PF 3/4	PF 1/2	PF 2 1/2	PF 3/4	PF 3/4	PF 2 1/2	800	250	95	155	220	310	106	50	125	385	450	815	90	P.C.D 500 8xM8	950	320 320 280 262 250	PF 3/4	PF 2 1/2	780	26.3